PQS SERVOLIFE FILTERS

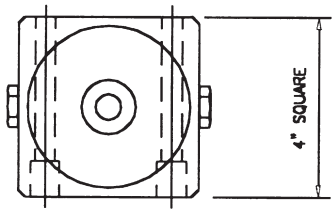

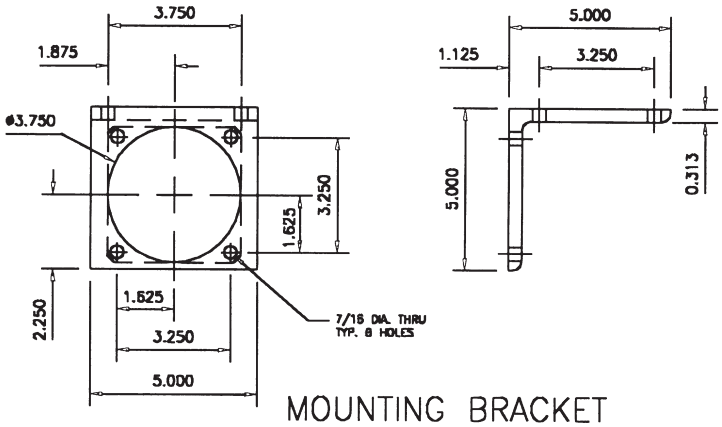

MOUNTING BRACKET
FOR INLINE MTG. – 2 REQ'D

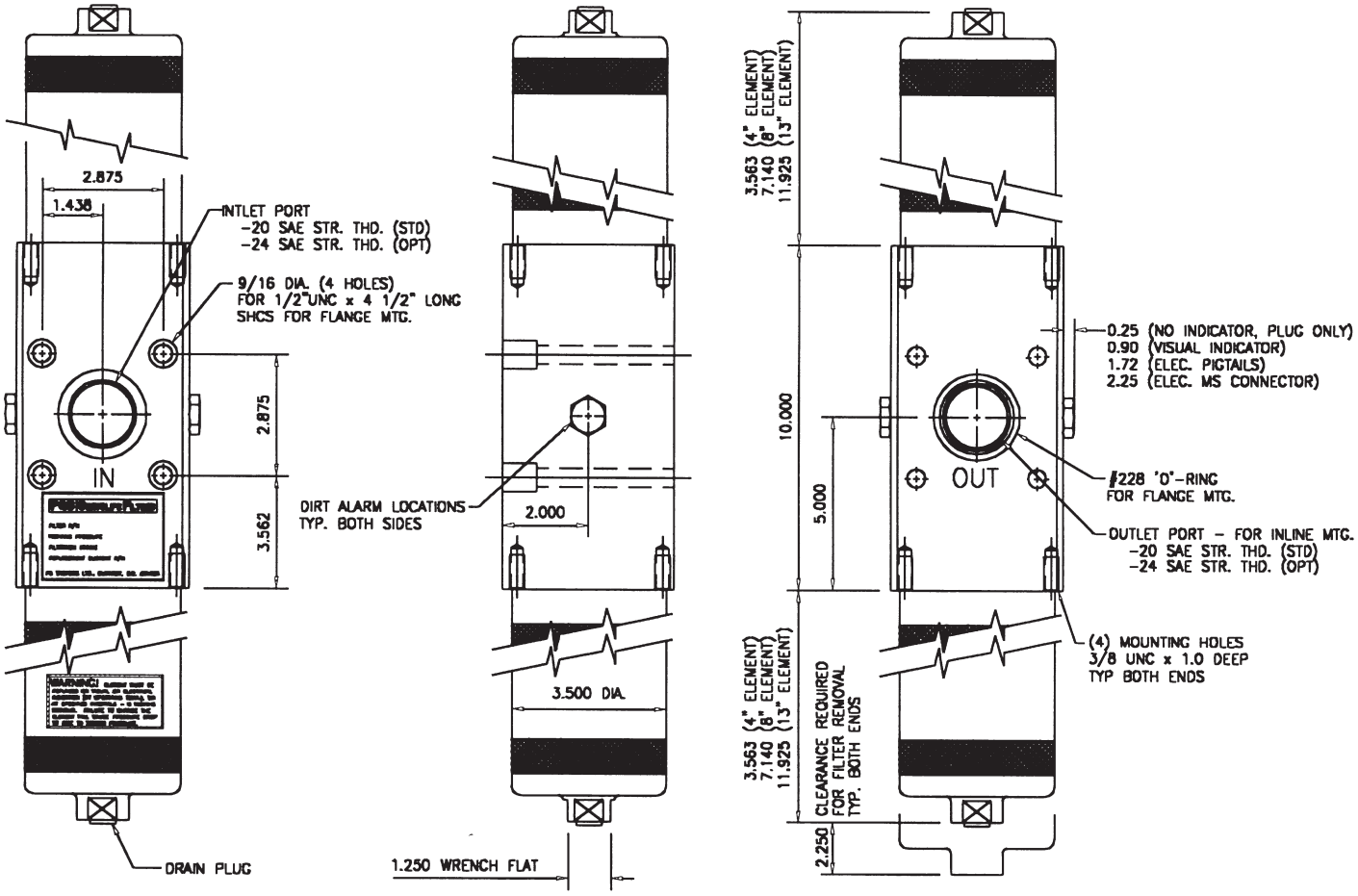

PQ SYSTEMS LTD.
A2 - 5279 Still Creek Avenue, Burnaby, B.C. Canada V5C 5V1
Tel: (604) 299-0022 Fax: (604) 299-8453